Features of the steering system

- Direct steering ratio 12.6
- New generation of electric rack and pinion steering (Dual Pinion architecture), which guarantees:

- Significant savings in consumption (up to 3% less than a conventional hydraulic steering system).
- high performance for managing significant loads at all steering wheel operating speeds
- Power-assistance curves modulated according to driving conditions.
- Interaction of steering system with vehicle dynamics (DST) included as part of the dna operating strategies.

- Steering diameter 10.9 m
- Steering column collapsible in the event of impact in line with the most recent safety standards.
- The steering system has been designed to guarantee the best performances for the driver during sporty driving together with excellent handling and limited effort during parking manoeuvres.

The steering column guarantees:

- 40 mm telescopic adjustment.
- 4° angle adjustment.
- Adjustment loads: from 50 N to 100 N.
- A 65 mm controlled energy absorption collapse travel in addition to adjustment divided into three stages: initial detachment, collapse travel and end of travel. The absorption curve was tuned in a coordinated manner with the steering wheel air bag and seat belt pretensioners in order to achieve the maximum performance during frontal impact compatible with the Euroncap rating.
- A rigidity of 60 Hz.
- A weight < 5 kg.

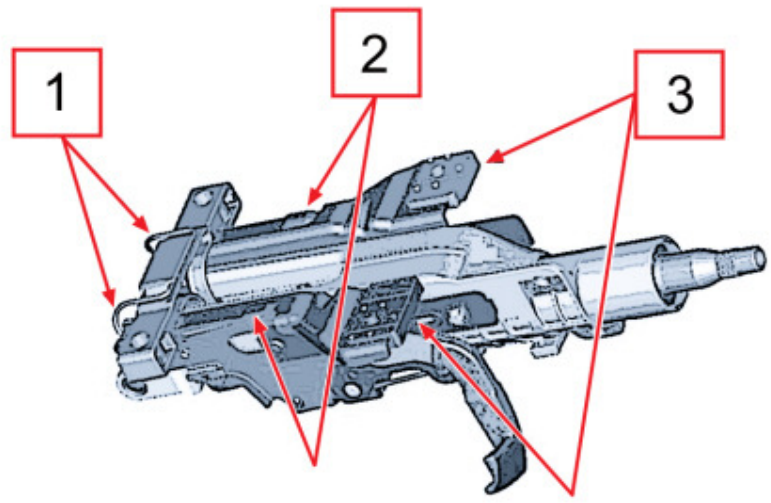

1. Energy absorbing wire.
2. No. 2 bottoms on support.
3. Capsules with resin injection.

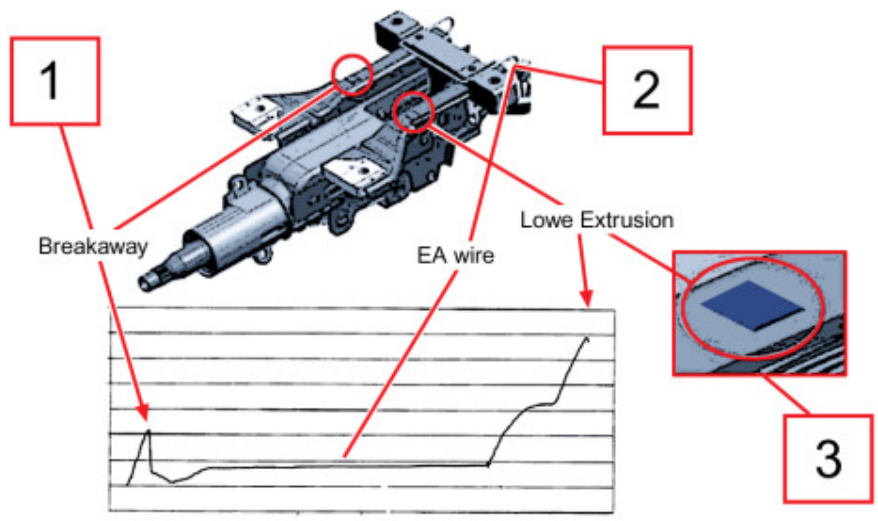

1. Initial detachment controlled by capsules with resin injection.
2. Collapse travel from energy absorbing wire.
3. End of travel controlled by bottom on support.

Main features of the steering column:

- Many possibilities for defining the collapse travel (tuning) according to the loads from the vehicle crash.
- Adjustment lever out of the EuroNcap knee areas.
- High rigidity for better driving comfort, to minimise the vibration from the engine and the road.
- "Positive Lock" system to avoid the influence of the adjustment travel on the collapse travel.

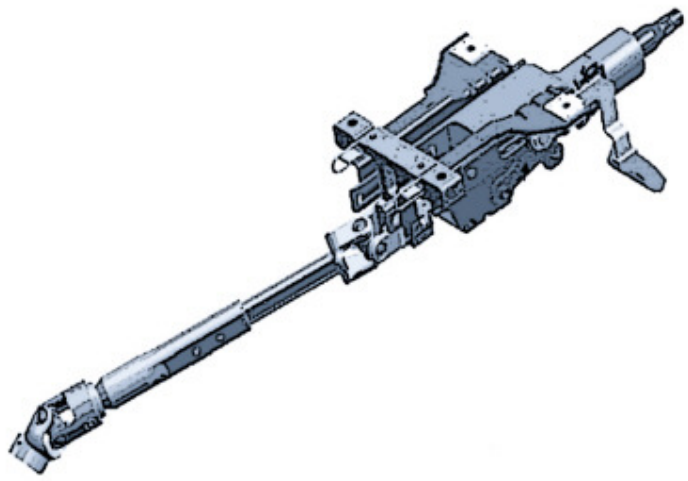

In compliance with current European standards, the steering lock guarantees the locking of the steering wheel by means of a Rencol clutch bushing, resistant to rotation loads between 100 Nm and 270 Nm, to prevent damage to the mechanical steering components in the event of a break-in attempt.

Dual Pinion system

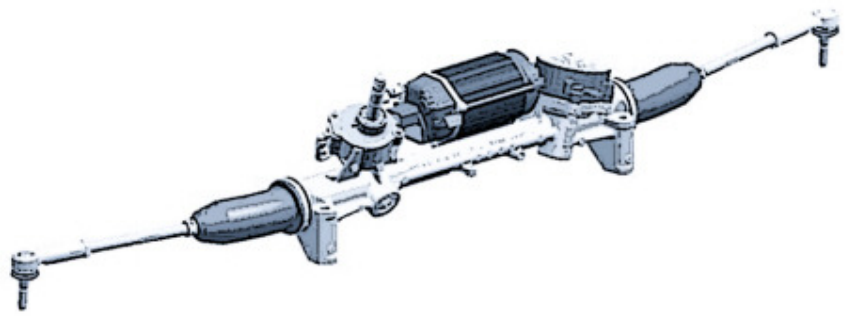

Left hand drive version

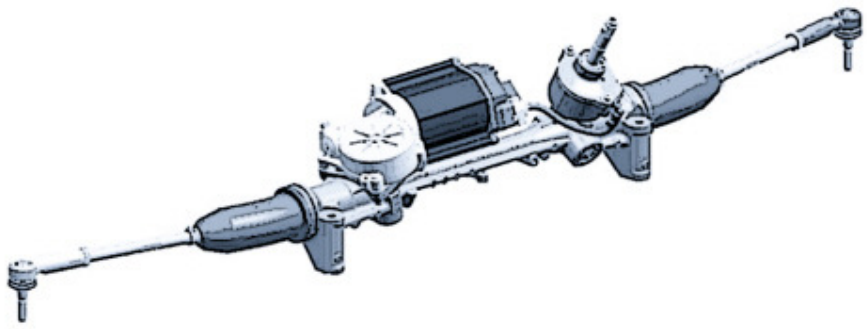

Right hand drive version

The Dual Pinion electromechanical steering system is manufactured by ZF and is made up of two pinions that are able to transmit the axial force necessary to balance the force on the link.

The two pinions are represented by the drive pinion and the power pinion.

1. The drive pinion creates the mechanical link between the steering wheel and the rack.
2. The power pinion transfers the torque generated by the electric motor to the rack.

As far as the power pinion is concerned, movement is transferred from the crankshaft to a worm screw through a flexible coupling made out of a material similar to that of the drive belts.

The shaft is supported in the middle by a system similar to a ball joint that can be used to take up play during the assembly process and at the end by a ball bearing.

The worm screw meshes with a toothed wheel made out of plastic (nylon).

The toothed wheel, in turn, contains a hole housing a toothed metal ring press-fitted to the power pinion to limit the torque reaching the rack due to a pulse effect received by the wheel.

The shaft is supported by two bearings:

-
-

Main components of the Dual Pinion system:

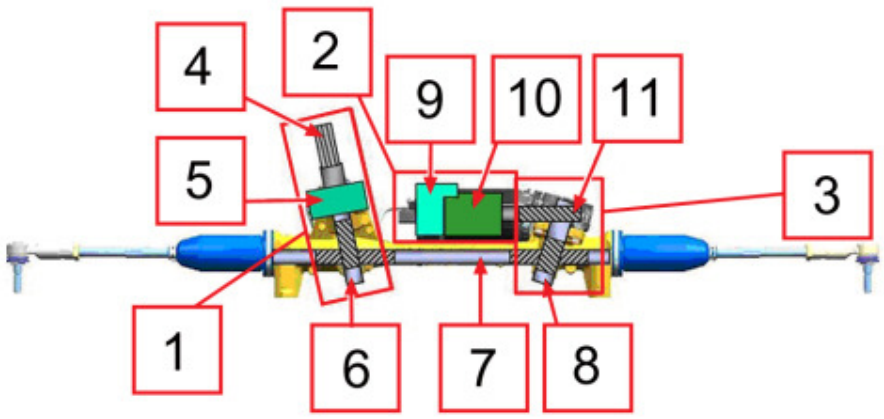

1. Collapsible shaft and power pinion unit
2. Electronic unit
3. Power pinion unit
4. Telescopic shaft engagement point
5. Torque sensor and steering angle sensor
6. Drive pinion
7. Rack
8. Power pinion
9. NGE
10. Electric motor
11. Worm screw

The advantages of the Dual Pinion system over a conventional electrical or mechanical steering system may be briefly classified into three categories:

1. Performance:

-
-
-
-

2. Environment:

-

3. Installation:

-
-

The following graphs illustrate the benefits over a conventional mechanical or electric steering system:

Graph 1

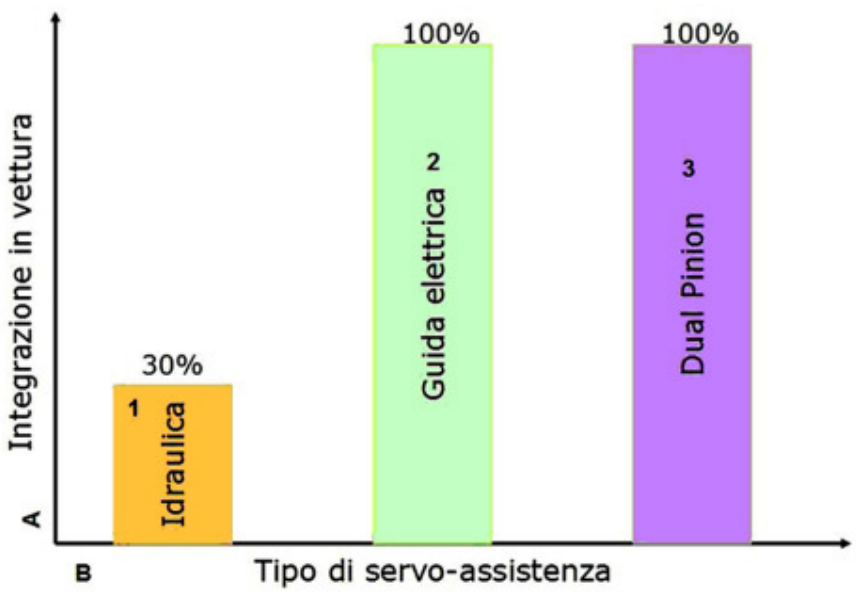

Graph 2

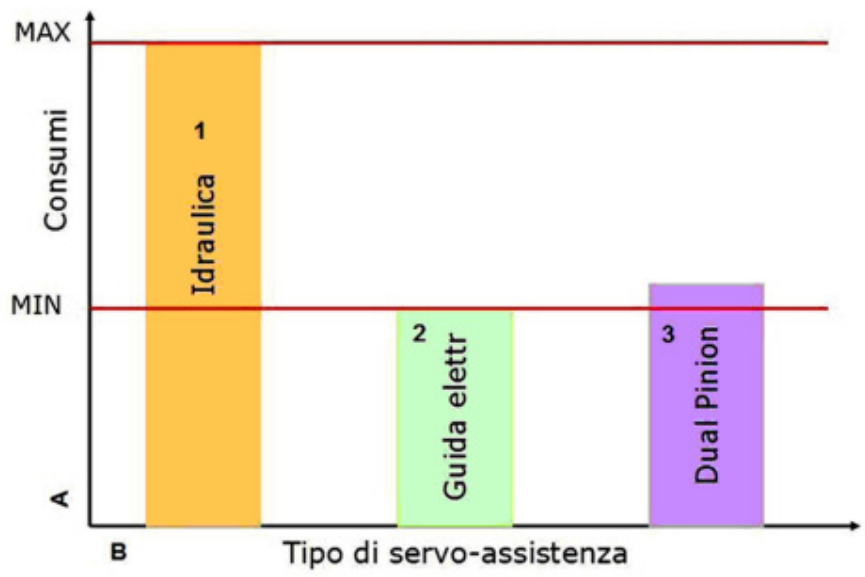

Graph 3

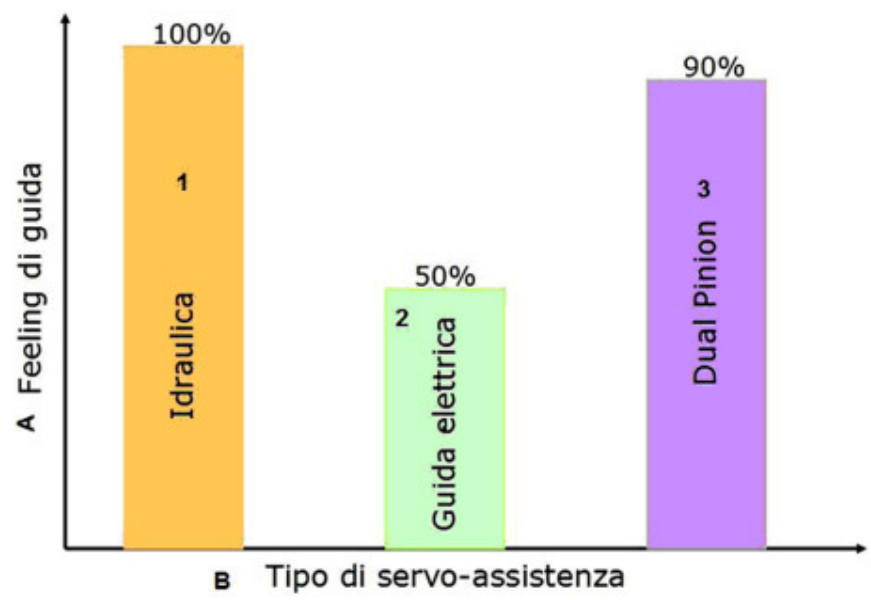

Graphs:
A. Shows:

-
-
-

B. Type of power assistance:
1. Hydraulic steering
2. Electric steering
3. Dual pinion

Power pinion unit

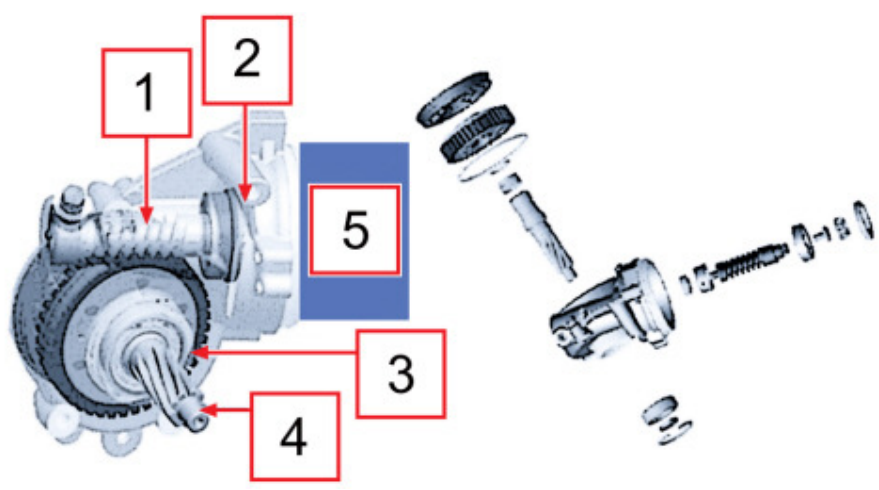

1. Worm screw
2. Connector
3. Toothed wheel
4. Power pinion
5. Electric motor

The movement is transferred from the engine to the worm screw through a coupling. The worm screw engages with the toothed wheel fitted on the power pinion which in turn engages with the rack.

Flexible coupling

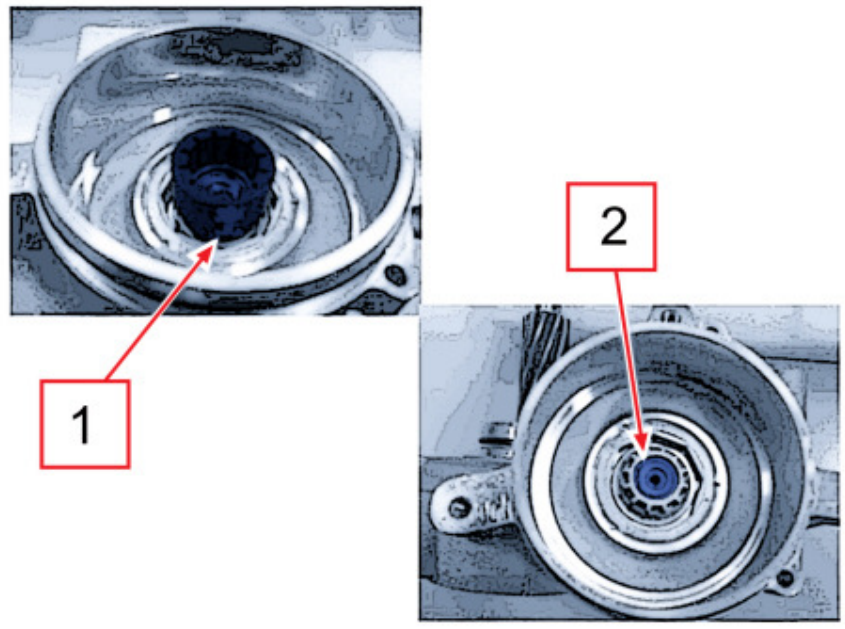

1. Rubber electric motor/worm screw connection coupling
2. Worm screw inlet

Electronic unit

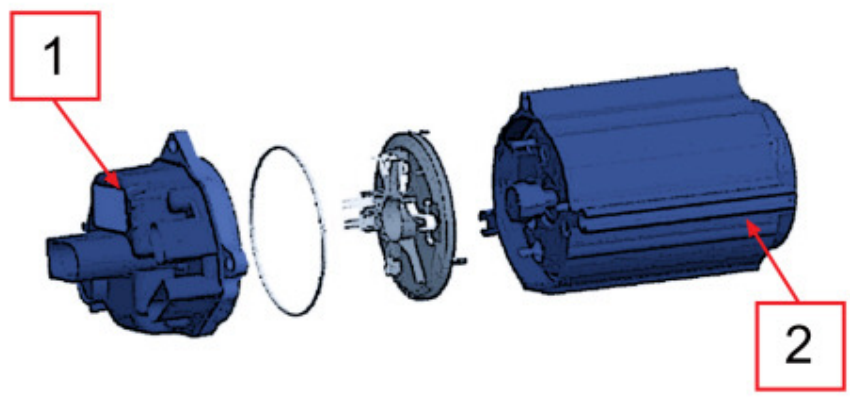

1. NGE
2. Three phase asynchronous motor

The NGE controls steering power assistance, depending on the car speed, the conditions required using dna and operates according to the requests from the DST (VDC integration system). This information is read by the CAN. At the same time, the NGE writes information about the steering wheel angle to the CAN, sending the data to the other car systems.

The motor is three phase asynchronous type and transmits the torque necessary to the power assistance through the power pinion. It has the following advantages:

-
-
-

NGE pin out

connector	Pin	2-way connector	Colour
		Function	
A	1	Electric steering earth	N
A	2	Electric steering supply	R
		Connector 3	
B	1	C-CAN L (low)	T
B	2	C-CAN H (high)	V
B	3	ECU +15 supply	CB

The table lists the steering box fault codes (DTC):

DTC	DTC Description

C1001	Internal error
C1002	Steering column motor torque position sensors
C1003	Vehicle speed signal (CAN)
C1005	Electric steering warning lamp
C1006	Cinematic error
C1008	Position sensor calibration
C1009	Internal error
C100A	DST module not available
C1200	Battery voltage
C1201	Battery error
C1211	Faulty control unit
C1214	End of line configuration incorrect
C1221	Engine management control unit
C1321	Brake Node (NFR)
U0001	CAN line error
U1700	Communic. with Body Computer (NBC)
U1701	Engine Control (NCM)
U1706	Brake Node (NFR)

Input shaft

The input shaft creates the mechanical link between the steering wheel and the rack. A torque and steering angle measurement sensor is fitted on the input shaft.

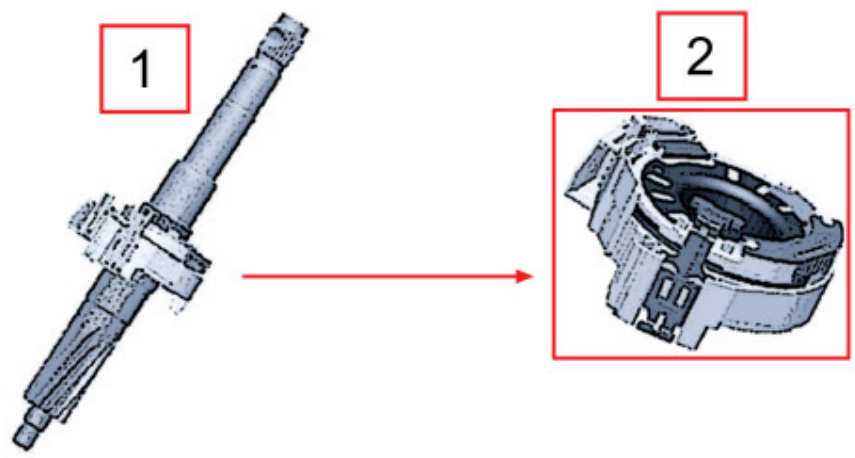

1. Input shaft assembly
2. Torque and steering angle sensor

Torque sensor

The torque sensor detects the torque applied on the input shaft and sends this information to the NGE, which in turn controls the electric motor to generate the power for the power assistance.

Steering angle sensor

The steering angle sensor detects the input shaft angle and is indispensable for VDC systems, steering active return functions and inertia compensation.

In the event of battery removal/refitting, at the next Key On a loss of the data on the torque and steering angle sensors could occur. In this case the sensors must be calibrated as follows:

-
-

-
-
-
-
-
-

Connection between drive pinion sensor and NGE

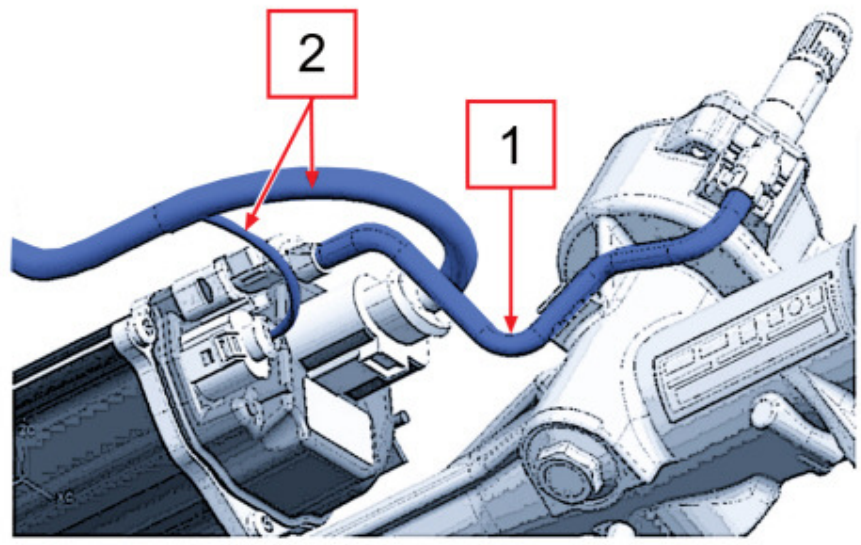

1. Connection cable between drive pinion sensor and NGE control unit
2. Battery connection cable

NGE operating diagram

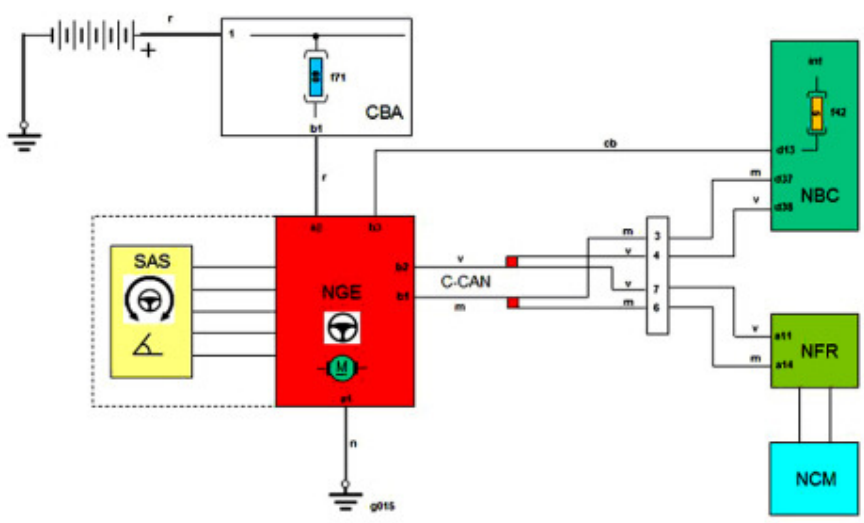

Dual Pinion system operating logics

Voltage at NGE connector (V)	Power assistance
From 17 V to 11.5 V	100%
From 11.5 to 9 V	Linear decrease from 100% at 17 V to 50% at 9 V
From 9 V to 8.9 V	Linear decrease from 50% at 9 V to 0% at 8.9 V
< 8.9 V and > 17 V	No power assistance
From 6.5 V to 17 V	CAN network correct operation
NGE operating temperature (°C)	Power assistance
From -40 to +110°	100%
From +110° to +120°	Linear decrease from 100% to 60%
From +120° to +125°	Linear decrease from 60% to 0%
> +125°	No power assistance

Steering angle speed (°/sec)	Total output power (kN) (with 15 Nm torque applied to the steering)
100	9,2
300	9,2
520	6,3
800	4,5
900	3,72
1000	2,55

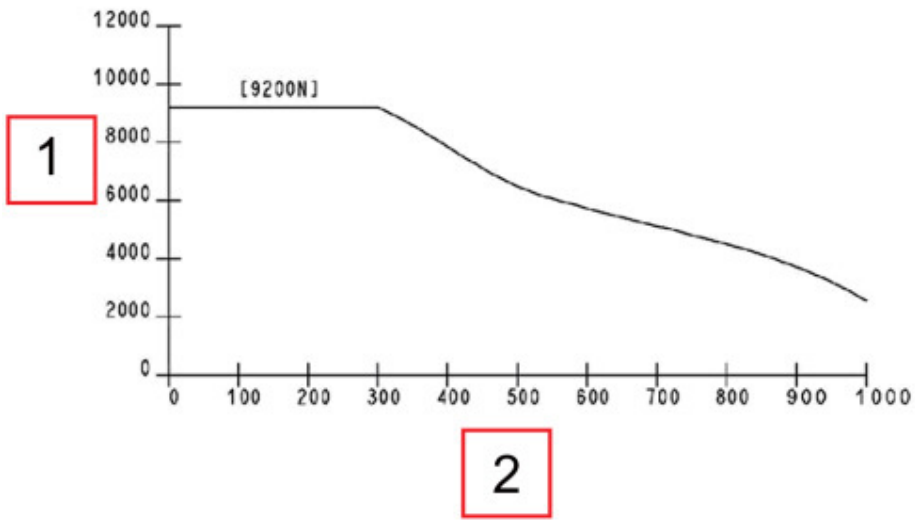

Reading limits of steering angle sensor (deg)		
	Min	Max
Range	-630°	+630°
Reading limits of torque sensor (deg/sec)		
	Min	Max
Range	-2000	+2000